Wind Transmitter

Instruction for use

- with analogue output

4.3303.22.xxx



Dok. No. 020856/09/22

THE WORLD OF WEATHER DATA

Safety Instructions

- Before operating with or at the device/product, read through the operating instructions.
  This manual contains instructions which should be followed on mounting, start-up, and operation.
  A non-observance might cause:
  - failure of important functions
  - endangerment of persons by electrical or mechanical effect
  - damage to objects
- Mounting, electrical connection and wiring of the device/product must be carried out only by a qualified technician who is familiar with and observes the engineering regulations, provisions and standards applicable in each case.
- Repairs and maintenance may only be carried out by trained staff or **Adolf Thies GmbH & Co. KG**. Only components and spare parts supplied and/or recommended by **Adolf Thies GmbH & Co. KG** should be used for repairs.
- Electrical devices/products must be mounted and wired only in a voltage-free state.
- **Adolf Thies GmbH & Co KG** guarantees proper functioning of the device/products provided that no modifications have been made to the mechanics, electronics or software, and that the following points are observed:
- All information, warnings and instructions for use included in these operating instructions must be taken into account and observed as this is essential to ensure trouble-free operation and a safe condition of the measuring system / device / product.
- The device / product is designed for a specific application as described in these operating instructions.
- The device / product should be operated with the accessories and consumables supplied and/or recommended by **Adolf Thies GmbH & Co KG** .
- Recommendation: As it is possible that each measuring system / device / product may, under certain conditions, and in rare cases, may also output erroneous measuring values, it is recommended using redundant systems with plausibility checks for **security-relevant applications**.

Environment



- As a longstanding manufacturer of sensors Adolf Thies GmbH & Co KG is committed to the objectives of environmental protection and is therefore willing to take back all supplied products governed by the provisions of "*ElektroG*" (German Electrical and Electronic Equipment Act) and to perform environmentally compatible disposal and recycling. We are prepared to take back all Thies products concerned free of charge if returned to Thies by our customers carriage-paid.



- Make sure you retain packaging for storage or transport of products. Should packaging however no longer be required, please arrange for recycling as the packaging materials are designed to be recycled.

Documentation

- © Copyright **Adolf Thies GmbH & Co KG**, Göttingen / Germany
- Although these operating instructions have been drawn up with due care, **Adolf Thies GmbH & Co KG** can accept no liability whatsoever for any technical and typographical errors or omissions in this document that might remain.
- We can accept no liability whatsoever for any losses arising from the information contained in this document.
- Subject to modification in terms of content.
- The device / product should not be passed on without the/these operating instructions.

Contents

1 Models 3
2 Application 4
3 Set-up of the instrument 4
4 Recommendation Site Selection / Standard Installation 4
5 Installation 5
5.1 Mounting of the cup star 5
5.2 Electrical Mounting 6
5.3 Mounting of the Wind Transmitter 7
6 Maintenance 7
7 Connecting Diagram 7
8 Technical Data 9
9 Dimension diagram 9
10 EC-Declaration of Conformity 10
11 UK-CA-Declaration of Conformity 11

1 Models

Order - no.	Measuring range	Electrical output	Model
4.3303.22.040	0...50m/s	0...20mA (Load resistor: ≤ 500Ω)	Standard
4.3303.22.041	0...50m/s	4...20mA (Load resistor: ≤ 500Ω)	Standard
4.3303.22.060	0...50m/s	0….1V (Load resistor: ≥ 1000Ω)	Standard
4.3303.22.061	0...50m/s	0...10V (Load resistor: ≥ 1000Ω)	Standard
4.3303.22.073	0...50m/s	0…. 5V (Load resistor: ≥ 1000Ω)	Standard
4.3303.22.640	0…60m/s	0...20mA (Load resistor: ≤ 500Ω)	Standard
4.3303.22.641	0…60m/s	4...20mA (Load resistor: ≤ 500Ω)	Standard
4.3303.22.661	0…60m/s	0...10V (Load resistor: ≥ 1000Ω)	Standard
4.3303.22.673	0…60m/s	0….5V (Load resistor: ≥ 1000Ω)	Standard
4.3303.22.841	0…60m/s	4...20mA (Load resistor: ≤ 500Ω)	“Ship version” * - reinforced cup star - special ball bearing

* Wind transmitters for heavy mechanical load, for ex. on ships, wind power plants or the like.

2 Application

The wind transmitter is used for the registration of the horizontal component of the wind velocity. The measuring value will be placed at the output as analogue signal. The signal can be given to display instruments, recording instruments, datalogger as well as process wise systems. The wind transmitter is equipped with an electronically regulated heating system in order to prevent ice and frost from the ball bearings and the outer rotation parts.

Power supply unit, Order no. 9.3388.00.000 provides the transmitter and the heating system with current. It is advisable to attach Lightning rod, Order no. 4.3100.99.000 in areas with considerable lightning activity.

3 Set-up of the instrument

A low-inertia light metallic cup star is set into rotation by the wind. Through the opto-electronic rotating frequency-scanning the resulting pulse frequency is converted through an integrated measuring transducer into an analogue signal. The measuring transducer is normally provided with voltage from the heating system. The instrument can also be used without the heating system. In this case the measuring transducer has to be provided with a separate voltage supply. Input and outputs have to be protected from overload by Transzorb diodes.

The outer parts of the instrument are made of corrosion-resistant anodised aluminium. The sensitive parts inside of the instrument are protected from precipitation through labyrinth seals and o-rings. The instrument is designed to be mounted to a mast, the electrical connection is located in the stem of the transmitter.

It consists of the following parts:
1 Case
1 Cup star
1 Connection plug

4 Recommendation Site Selection / Standard Installation

According to international regulations, the surface wind should be measured at a height of 10 m above flat, open terrain, in order to achieve comparable values. An open terrain is defined as terrain where the distance between the wind-measuring instrument and the next obstacle is at least ten times the height of this obstacle (see VDI 3786, Part 2). If the regulation cannot be adhered to, the measuring instrument should be installed at a height at which the measurement values are not influenced by any local obstacles. In any case, the measuring instruments are to be installed at a height of 6 to 10m above the mean height of the buildings or trees in the vicinity. If it is necessary to install the instrument on a roof, it should be installed in the centre of the roof in order to avoid any preferential directions.

5 Installation

Attention:

Storing, mounting and operation under weather conditions is permissible only in vertical position, as otherwise water can get into the instrument.

Remark:

When using fastening adapters (angle, traverses, etc.) please take a possible effect by turbulences into consideration.

5.1 Mounting of the cup star

Unscrew the cap nut (SW 8) from the wind velocity sensor case and remove the disk. Keep the rubber sealing washer in the protection cap. Set the cup star into position in such a way that the dowel pin in the cup star catches in the nut of the protective cap. Replace the disk and re-screw the cap nut. Hold the transmitter on the protective cap not on the cup.

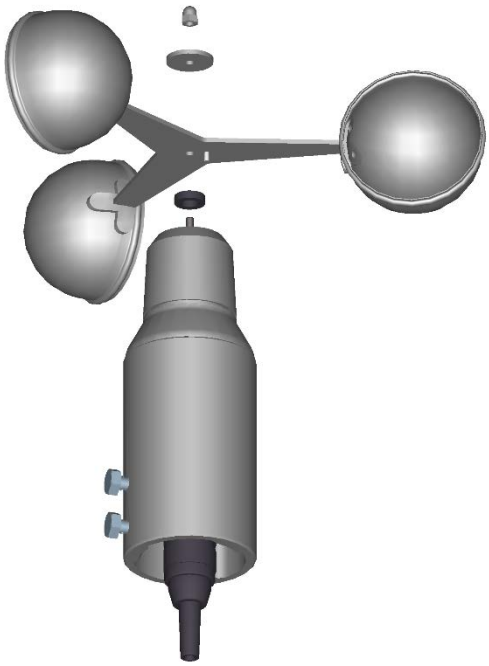

5.2 Electrical Mounting

A shielded cable with a diameter of 5..8mm and a core section of 0,5…0,75mm² must be soldered on to the enclosed plug.

- The number of required cores, and the PIN assignment is stated in the connection diagram (chapter 7).

Cable recommendation	
Type/ No. of cores /Diameter	Cable diameter
LIYCY 3 x 0,5mm² LIYCY 5 x 0,5mm²	ca. 5mm ca. 7mm

Coupling socket 201041 (5-pol), Type Binder, Series 691

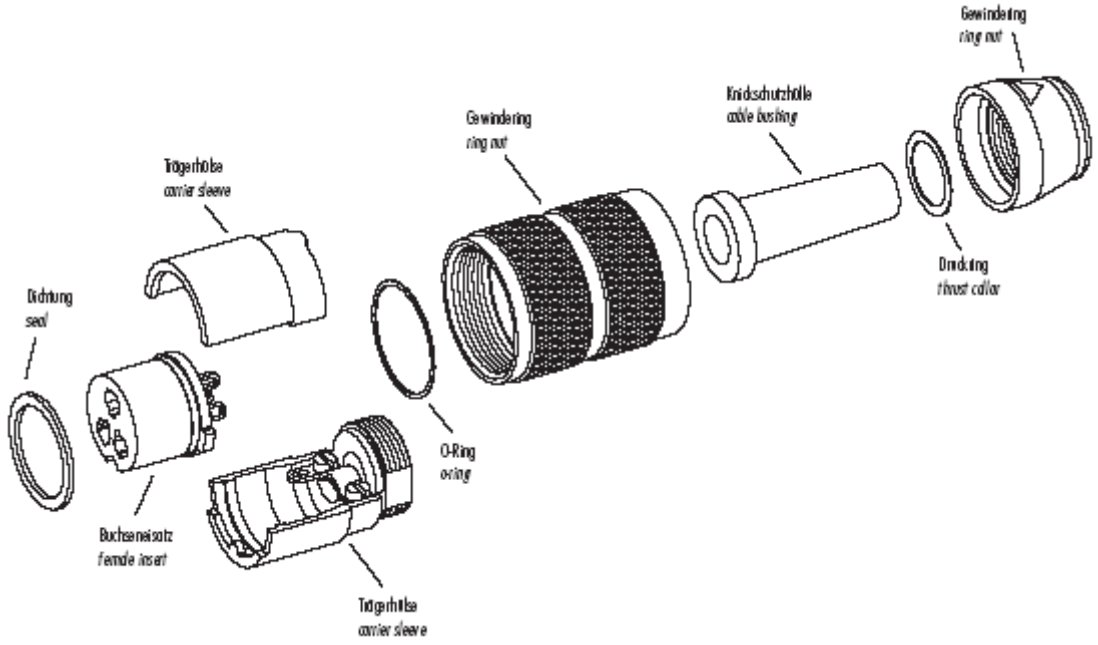

1. Removing Coupling socket.
2. Stringing coupling socket on cable.
3. Stripping cable sheath 20mm.
4. Putting uncovered shield backwards onto the cable sheath.
5. Stripping uncovered cable cores 5mm.
6. Pushing shrink hose over cable cores.
7. Soldering stripped cable cores onto the solder filament of the bush insert, pushing shrink hose over the soldering afterwards, and shrinking it.
8. Fastening cable and shield in the carrier sleeve by means of the clamp.
9. Mount coupling socket.

5.3 Mounting of the Wind Transmitter

Mount the transmitter to a short piece of pipe of R 1½“ (Ø 48mm) and a length of 50mm. The short piece of pipe must have an internal diameter of at least 36mm as the wind transmitter must be connected electrically with a plug from below. Once the electrical connection has been carried out, set the wind transmitter onto the short piece and fasten it to the shaft with the two hexagonal screws.

6 Maintenance

After proper mounting the instrument works maintenance free.

Heavy pollution can clog up the slit between the rotating and the stationary parts of the wind transmitter. This slit must be kept clean.

Remark:

Please use only original packing for transporting the instrument.

7 Connecting Diagram

Order - no.

4.3303.22.040
4.3303.22.041
4.3303.22.060
4.3303.22.061
4.3303.22.073
4.3303.22.640
4.3303.22.641
4.3303.22.661
4.3303.22.673
4.3303.22.841

Wind Transmitter: Operation **with** Heating

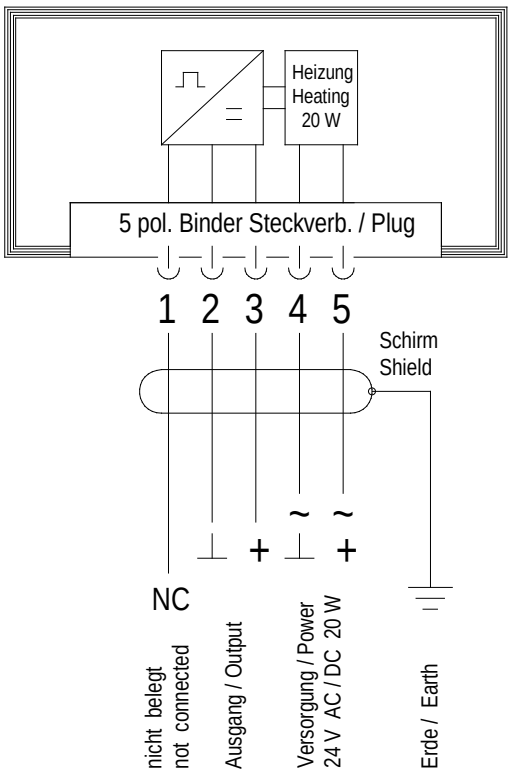

View on the soldered side of the coupling socket

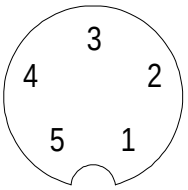

Attention:

The power ground must be galvanically isolated from the signal ground

Order - no.	Wind Transmitter: Operation **without** Heating	View on the soldered side of the coupling socket
4.3303.22.040 4.3303.22.041 4.3303.22.060 4.3303.22.061 4.3303.22.073 4.3303.22.640 4.3303.22.641 4.3303.22.661 4.3303.22.673 4.3303.22.841	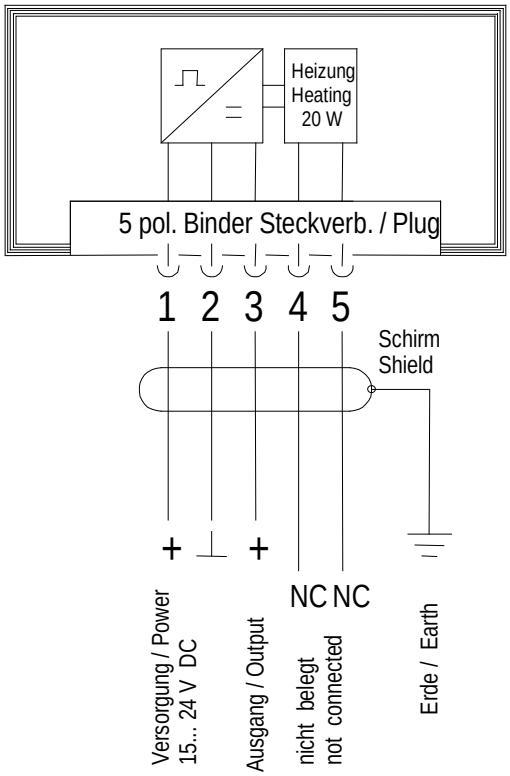	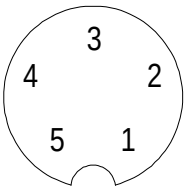

Attention:

NC: Cable isolating – no connecting

8 Technical Data

Measuring range	see models available
Starting speed	0,3m/s
Max. load	60m/s
Electrical output	see models available
Accuracy	± 0,4m/s resp. 2,5% of meas. value
Resolution	0,05m wind run
Wind load at 35 m/s	approx. 10N
Distance constant	5m
Ambient temperature	-35...+80°C
Operating voltage	
With Heating	24V AC/DC ca. 20W; electronically controlled
Without Heating	15 ... 24V DC
Connecting	5-pole plug
Mounting	onto mast tube 1 ½" , DIN 2441
Weight	1kg

9 Dimension diagram

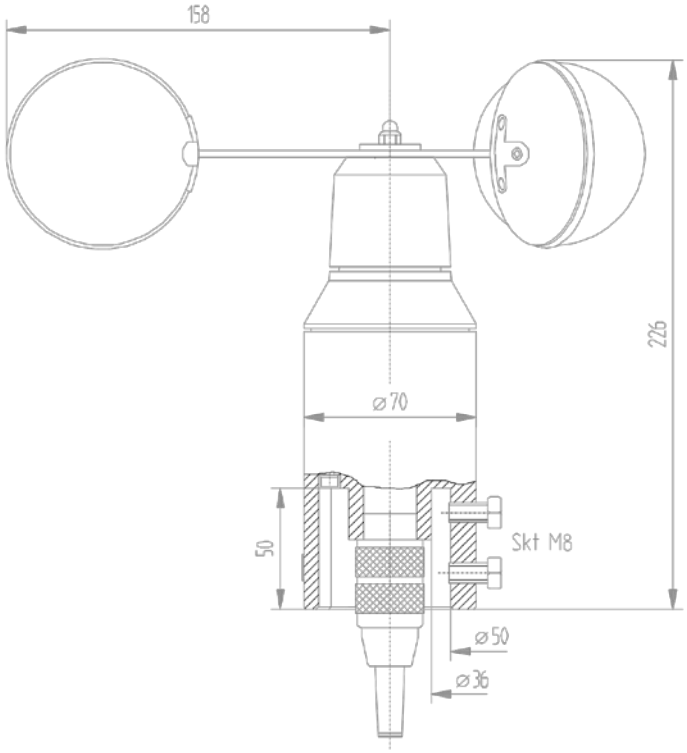

Figure 1: Dimension diagram

10 EC-Declaration of Conformity

Manufacturer: Adolf Thies GmbH & Co. KG
Hauptstraße 76
37083 Göttingen, Germany
http://www.thiesclima.com

Product: WR classic analog

Doc. Nr. 434-44790_CE

Article Overview:

4.3303.22.040	4.3303.22.041	4.3303.22.060	4.3303.22.061	4.3303.22.073	4.3303.22.640	4.3303.22.641	4.3303.22.661	4.3303.22.673	4.3303.22.841
4.3324.31.040	4.3324.31.061	4.3324.31.073	4.3324.31.640	4.3324.31.641	4.3324.31.661	4.3324.31.673	4.3324.31.941		

The indicated products correspond to the essential requirement of the following European Directives and Regulations:

2014/30/EU	26.02.2014	DIRECTIVE 2014/30/EU OF THE EUROPEAN PARLIAMENT AND OF THE COUNCIL of 26 February 2014 on the harmonisation of the laws of the Member States relating to electromagnetic compatibility.
2017/2102/EU	15.11.2017	DIRECTIVE (EU) 2017/2102 of the European Parliament and of the Council of November 15, 2017 amending Directive 2011/65 / EU on the restriction of the use of certain hazardous substances in electrical and electronic equipment.
2012/19/EU	13.08.2012	DIRECTIVE 2012/19/EU OF THE EUROPEAN PARLIAMENT AND OF THE COUNCIL of 4 July 2012 on waste electrical and electronic equipment (WEEE).
2018/1139/EU	04.07.2018	Regulation (EU) 2018/1139 of the European Parliament and of the Council of 4 July 2018 on common rules in the field of civil aviation and establishing a European Union Aviation Safety Agency.

The indicated products comply with the regulations of the directives. This is proved by the compliance with the following standards:

DIN EN 61000-6-2	2019-11	Electromagnetic compatibility Immunity for industrial environment
DIN EN 61000-6-3:2007 + A1:2011	2011-09	Electromagnetic compatibility (EMC). Generic standards. Emission standard for residential, commercial and light-industrial environments
DIN EN 61010-1	2020-03	Safety requirements for electrical equipment for measurement, control, and laboratory use. General requirements
DIN EN 63000	2019-05	Technical documentation for the assessment of electrical and electronic products with respect to the restriction of hazardous substances.

Legally binding signature:

General Manager - Dr. Christoph Peper

Legally binding signature:

Development Manager - ppa. Jörg Petereit

This declaration certificates the compliance with the mentioned directives, however does not include any warranty of characteristics.
Please pay attention to the security advises of the provided instructions for use.

11 UK-CA-Declaration of Conformity

Manufacturer: Adolf Thies GmbH & Co. KG
Hauptstraße 76
37083 Göttingen, Germany
http://www.thiesclima.com

Product: WR classic analog

Doc. Nr. 434-44790_CA

Article Overview:

4.3303.22.040	4.3303.22.041	4.3303.22.060	4.3303.22.061	4.3303.22.073	4.3303.22.640	4.3303.22.641	4.3303.22.661	4.3303.22.673	4.3303.22.841
4.3324.31.040	4.3324.31.061	4.3324.31.073	4.3324.31.640	4.3324.31.641	4.3324.31.661	4.3324.31.673	4.3324.31.941		

The indicated products correspond to the essential requirement of the following Directives and Regulations:

1091	08.12.2016	The Electromagnetic Compatibility Regulations 2016
RoHS Regulations 2012	01.01.2021	The Restriction of the Use of Certain Hazardous Substances in Electrical and Electronic Equipment Regulations 2012
3113	01.01.2021	Regulations: waste electrical and electronic equipment (WEEE)
2018/1139/EU	04.07.2018	Regulation (EU) 2018/1139 of the European Parliament and of the Council of 4 July 2018 on common rules in the field of civil aviation and establishing a European Union Aviation Safety Agency.

The indicated products comply with the regulations of the directives. This is proved by the compliance with the following standards:

BS EN IEC 61000-6-2	25.02.2019	Electromagnetic compatibility (EMC). Generic standards. Immunity standard for industrial environments
BS EN IEC 61000-6-3	30.03.2021	Electromagnetic compatibility (EMC). Generic standards. Emission standard for equipment in residential environments
BS EN 61010-1+A1	31.03.2017	Safety requirements for electrical equipment for measurement, control, and laboratory use. General requirements
BS EN IEC 63000	10.12.2018	Technical documentation for the assessment of electrical and electronic products with respect to the restriction of hazardous substances

This declaration of conformity is issued under the sole responsibility of the manufacturer.

Legally binding signature:

General Manager - Dr. Christoph Peper

Legally binding signature:

ppa.

Development Manager - ppa. Jörg Petereit

This declaration certificates the compliance with the mentioned directives, however does not include any warranty of characteristics.
Please pay attention to the security advises of the provided instructions for use.

Please contact us for your system requirements.
We advise you gladly.

ADOLF THIES GMBH & CO. KG
Meteorology and environmental metrology
Hauptstraße 76 · 37083 Göttingen · Germany
Phone +49 551 79001-0 · Fax +49 551 79001-65
info@thiesclima.com

www.thiesclima.com